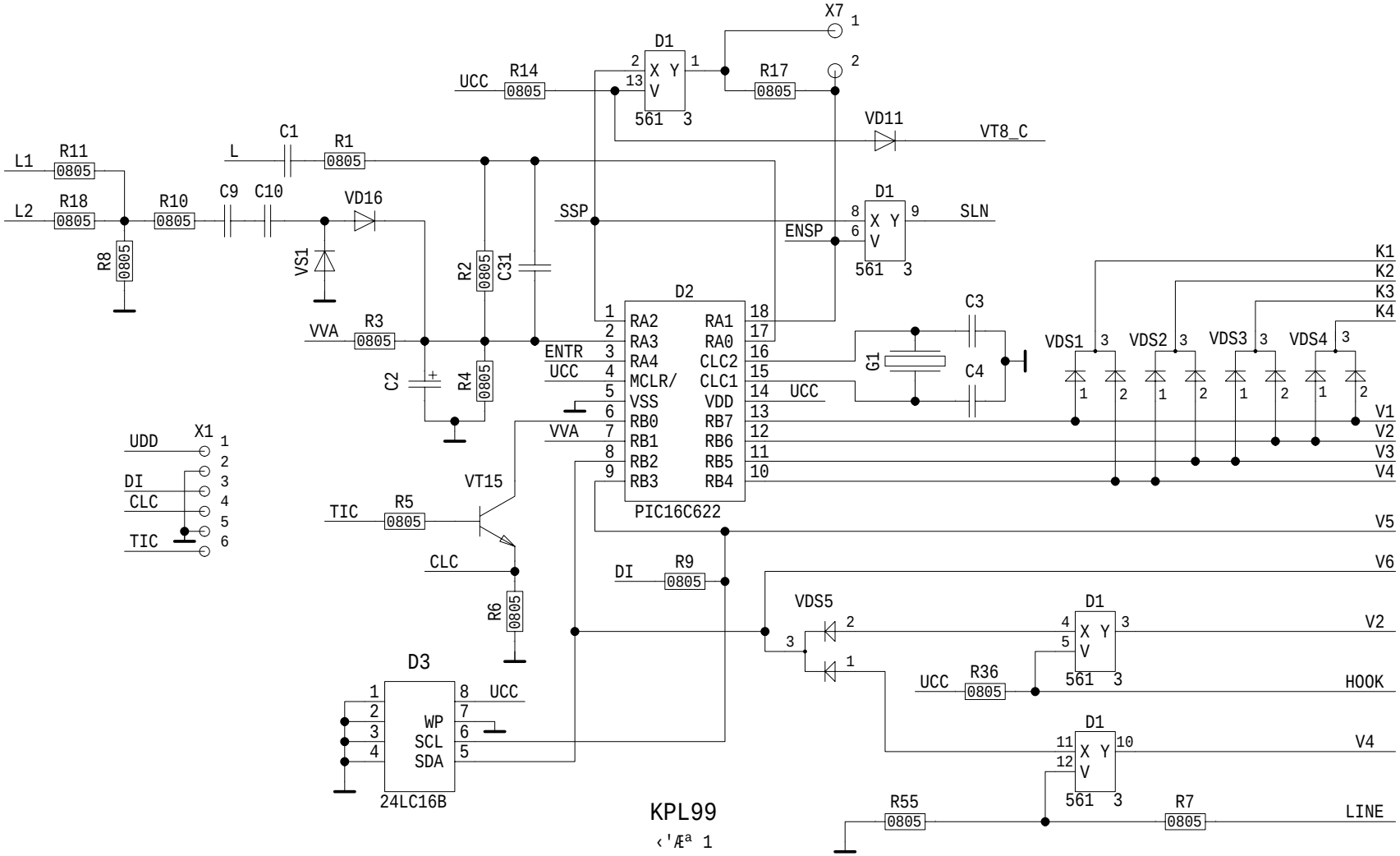
X7
D1
UCC
R14
0805
R17
0805
VD11
VT8_C
L1
R11
L2
R18
R10
C9
C10
C1
L
R1
VD16
VS1
R8
SSP
ENSP
SLN
R2
C31
VVA
R3
C2
R4
D2
ENTR
UCC
RA2
RA3
RA4
MCLR/
VSS
RB0
RB1
RB2
RB3
RA1
RA0
CLC2
CLC1
VDD
RB7
RB6
RB5
RB4
PIC16C622
C3
C4
G1
K1
K2
K3
K4
VDS1
VDS2
VDS3
VDS4
V1
V2
V3
V4
V5
V6
X1
UDD
DI
CLC
TIC
VT15
R5
R6
R9
VDS5
R36
HOOK
D3
WP
SCL
SDA
24LC16B
R55
R7
LINE

KPL99

‹'Æª 1